Work Order ID 74663

Wednesday, October 05, 2011 7:54:21 AM

Item ID: D3807-7
Revision ID:
Item Name: Gasket

Accept

Setup **Start**
Stop

Start Date: 10/5/2011 **Start Qty:** 4.00
Required Date: 10/7/2011 **Req'd Qty:** 4.00
Reference:

Cust Item ID:
Customer:

Approvals: **Process Plan:** MA **Date:** 11-10-5 **Tooling:** _____ **Date:** _____
QC: _____ **Date:** _____ **SPC (Y/N):** _____ **Date:** _____

Run **Start**
Stop

Sequence ID/ Work Center ID	Operation Description	Set Up/ Run Hours	Tool ID	Tool #	Plan Code	Accept Qty	Reject Qty	Reject Number	Insp. Stamp
Draw Nbr / **Revision Nbr**									
D3807 / Rev A									
100		0.00							
Waterjet	**Memo**	0.00				B11-10-11			
FLOW CNC Waterjet	1-Cut as per Dwg D3807 Dwg Rev: A Prog Rev: A 2-Deburr if necessary								(6)
110	QC2- Inspect parts off machine FAI/FAIB	0.00							
QC	**Memo**	0.00				B11-10-11			
Quality Control									

Dart Aerospace Ltd

W/O:		WORK ORDER CHANGES					
DATE	STEP	PROCEDURE CHANGE	By	Date	Qty	Approval Chief Eng / Prod Mgr	Approval QC Inspector

Part No: _____ **PAR #:** _____ **Fault Category:** _____ **NCR:** Yes No **DQA:** _____ **Date:** _____

Resolution: _____ **Disposition:** _____ **QA: N/C Closed:** _____ **Date:** _____

NCR:		WORK ORDER NON-CONFORMANCE (NCR)						
DATE	STEP	Description of NC Section A	Corrective Action Section B			Verification Section C	Approval Chief Eng	Approval QC Inspector
			Initial Chief Eng	Action Description Chief Eng	Sign & Date			

NOTE: Date & initial all entries

H:\fFORMS\Quality Assurance\approved QA\NCRWO RevE

Work Order ID 74663

Wednesday, October 05, 2011 7:54:21 AM

Item ID: D3807-7 **Accept** **Setup Start**

Revision ID: **Stop**

Item Name: Gasket

Start Date: 10/5/2011 **Start Qty:** 4.00 **Cust Item ID:**

Required Date: 10/7/2011 **Req'd Qty:** 4.00 **Customer:**

Reference:

Approvals: **Process Plan:** _____ **Date:** _____ **Tooling:** _____ **Date:** _____ **Run Start**

QC: _____ **Date:** _____ **SPC (Y/N):** _____ **Date:** _____ **Stop**

Sequence ID/ Work Center ID	Operation Description	Set Up/ Run Hours	Tool ID	Tool #	Plan Code	Accept Qty	Reject Qty	Reject Number	Insp. Stamp
120	QC8- Inspect parts - second check	0.00							
QC	Memo	0.00 8 11/10/12				(+6)			
Quality Control									
130	Identify as per dwg & Stock Location: FP	0.00							
Packaging	Memo	0.00				11/10/12 (6)			
Packaging									
140	QC21- Final Inspection - Work Order Release	0.00							
QC	Memo	0.00				11/10/12			
Quality Control									

MF 11-10-12

Dart Aerospace Ltd

W/O:		WORK ORDER CHANGES					
DATE	STEP	PROCEDURE CHANGE	By	Date	Qty	Approval Chief Eng / Prod Mgr	Approval QC Inspector

Part No: _____ **PAR #:** _____ **Fault Category:** _____ **NCR:** Yes No **DQA:** _____ **Date:** _____

Resolution: _____ **Disposition:** _____ **QA: N/C Closed:** _____ **Date:** _____

NCR:		WORK ORDER NON-CONFORMANCE (NCR)						
DATE	STEP	Description of NC Section A	Corrective Action Section B			Verification Section C	Approval Chief Eng	Approval QC Inspector
			Initial Chief Eng	Action Description Chief Eng	Sign & Date			

NOTE: Date & initial all entries

H:\fFORMS\Quality Assurance\approved QA\NCRWO RevE

Picklist Print

Wednesday, October 05, 2011 7:54:18 AM

Work Order ID: 74663

Parent Item: D3807-7

Parent Item Name: Gasket

Start Date: 10/5/2011 **Required Date:** 10/7/2011

Start Qty: 4.00 **Required Qty:** 4.00

Comments: IPP Rev:A 08-07-21 new issue DD verified by:ec IPP REV:B
10.12.08 PER REV.A DD VERF:EC

Component Item ID/ Item Name	Replacement Item ID	Mfg/ Purch	Bin Item	Primary Location	Last Location	Route Seq ID	Unit of Measure	Qty on Hand	Qty per Kit	Total Qty	Qty Issued	Date Issued	Status
MNEO60S.063 NEOPRENE SHEET 0.063		Purchased	No			100	sf	636.8500	1.946	8.648889	$2. B11-10-11		

Location	Loc Qty	Loc Code	
MAT052	636.85		
117295	55.68		
118026	127.87		
118663	73.3		
119130	380		119130

(6)

Dart Aerospace Ltd

W/O:		WORK ORDER CHANGES					
DATE	STEP	PROCEDURE CHANGE	By	Date	Qty	Approval Chief Eng / Prod Mgr	Approval QC Inspector

Part No: _____ **PAR #:** _____ **Fault Category:** _____ **NCR:** Yes No **DQA:** _____ **Date:** _____

Resolution: _____ **Disposition:** _____ **QA: N/C Closed:** _____ **Date:** _____

NCR:		WORK ORDER NON-CONFORMANCE (NCR)						
DATE	STEP	Description of NC Section A	Corrective Action Section B			Verification Section C	Approval Chief Eng	Approval QC Inspector
			Initial Chief Eng	Action Description Chief Eng	Sign & Date			

NOTE: Date & initial all entries

H:\fFORMS\Quality Assurance\approved QA\NCRWO RevE

DART AEROSPACE LTD	Work Order: 74663
Description: GASKET	Part Number: D3867-7
Inspection Dwg: D3867-7 , Rev: A	Page 1 of 1

FIRST ARTICLE INSPECTION CHECKLIST

[X] First Article [X] Prototype

Drawing Dimension	Tolerance	Actual Dimension	Accept	Reject	Method of Inspection	Comments
.422	+/- .010	.426	✓		V BC2	
Ø .31	+.006 - .001	.31	✓		V	
2.88	+/- .030	2.875	✓		V	
5.145	+/- .030	5.150	✓		V	
6.21	+/- .030	6.190	✓		V	
6.50	+/- .030	6.50	✓		T B01	
33.13	+/- .030	33.13	✓		T	
5.50	+/- .030	5.50	✓		T	
24.88	+/- .030	24.88	✓		T	
39.08	+/- .030	39.08	✓		T	
45.14	+/- .030	45.14	✓		T	
.063	+/- .010	.061	✓		V	

Measured by:	B	Audited by:	D	Prototype Approval:	
Date:	11-10-11	Date:	11/10/12	Date:	

Rev	Date	Change	Revised by	Approved
A		New Issue	KJ/JLM	

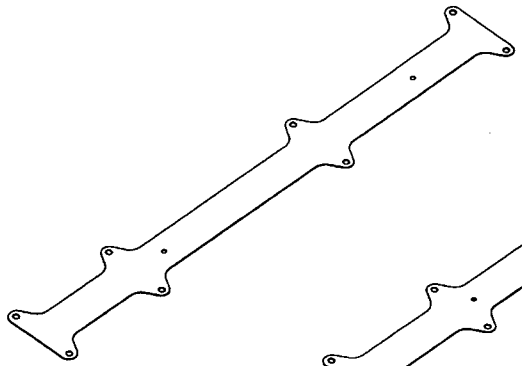

D3807-1 GASKET

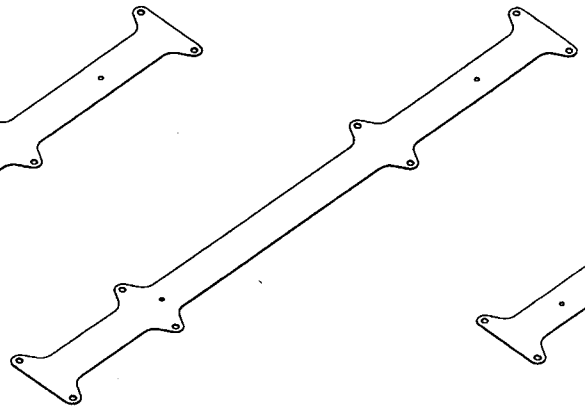

D3807-3 GASKET

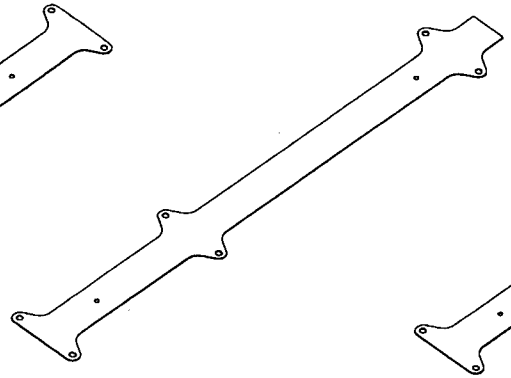

D3807-5 GASKET

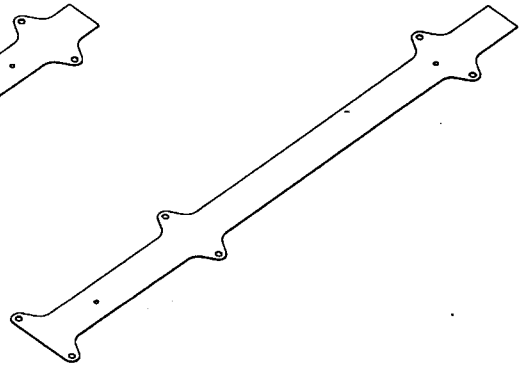

D3807-7 GASKET

#74663

RELEASED
LP 09.03.03
per ECN 09-538

NOTES:
1) MATERIAL: BLACK NEOPRENE SHEET, 0.063 THICK, 60 DUROMETER
REF. DART SPEC. M-NEO60-S.063
2) FINISH: NONE
3) TOLERANCES: PER DART QSI 018 UNLESS OTHERWISE NOTED
4) UNITS: INCHES UNLESS OTHERWISE NOTED
5) BREAK SHARP EDGES: N/A
6) IDENTIFICATION: IDENTIFY WITH DART P/N "D3807-X" USING YELLOW PAINT MARKER
7) WEIGHT:
D3807-1 = 0.32 lbs
D3807-3 = 0.36 lbs
D3807-5 = 0.32 lbs
D3807-7 = 0.33 lbs

REV.	DESCRIPTION	BY	DATE
A	NEW ISSUE	MB	08.11.21

DESIGN	MP	DART AEROSPACE USA, INC. PORT HADLOCK, WA	
DRAWN			
CHECKED	RLS	DRAWING NO. D3807	REV. A
MFG. APPR.			SHEET 1 OF 3
APPROVED		TITLE GASKET	SCALE NTS
DE APPR.			
DATE	08.11.21		

COPYRIGHT © 2008 BY DART AEROSPACE USA, INC.
THIS DOCUMENT IS PRIVATE AND CONFIDENTIAL AND IS SUPPLIED ON THE EXPRESS CONDITION THAT IT IS NOT TO BE USED FOR ANY PURPOSE OR COPIED OR COMMUNICATED TO ANY OTHER PERSON WITHOUT WRITTEN PERMISSION FROM DART AEROSPACE USA, INC.

Dart Aerospace Ltd

W/O:		WORK ORDER CHANGES					
DATE	STEP	PROCEDURE CHANGE	By	Date	Qty	Approval Chief Eng / Prod Mgr	Approval QC Inspector

Part No: _____ **PAR #:** _____ **Fault Category:** _____ **NCR:** Yes No **DQA:** _____ **Date:** _____

Resolution: _____ **Disposition:** _____ **QA: N/C Closed:** _____ **Date:** _____

NCR:		WORK ORDER NON-CONFORMANCE (NCR)						
DATE	STEP	Description of NC Section A	Corrective Action Section B			Verification Section C	Approval Chief Eng	Approval QC Inspector
			Initial Chief Eng	Action Description Chief Eng	Sign & Date			

NOTE: Date & initial all entries

H:\fFORMS\Quality Assurance\approved QA\NCRWO RevE

RELEASED
09.03.07

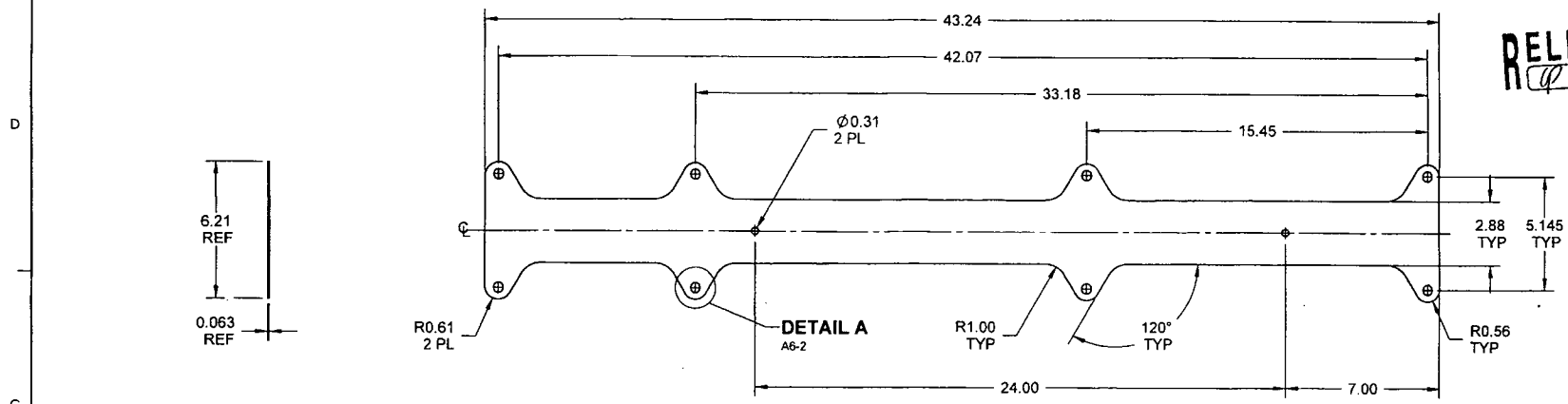

D3807-1 GASKET

74663

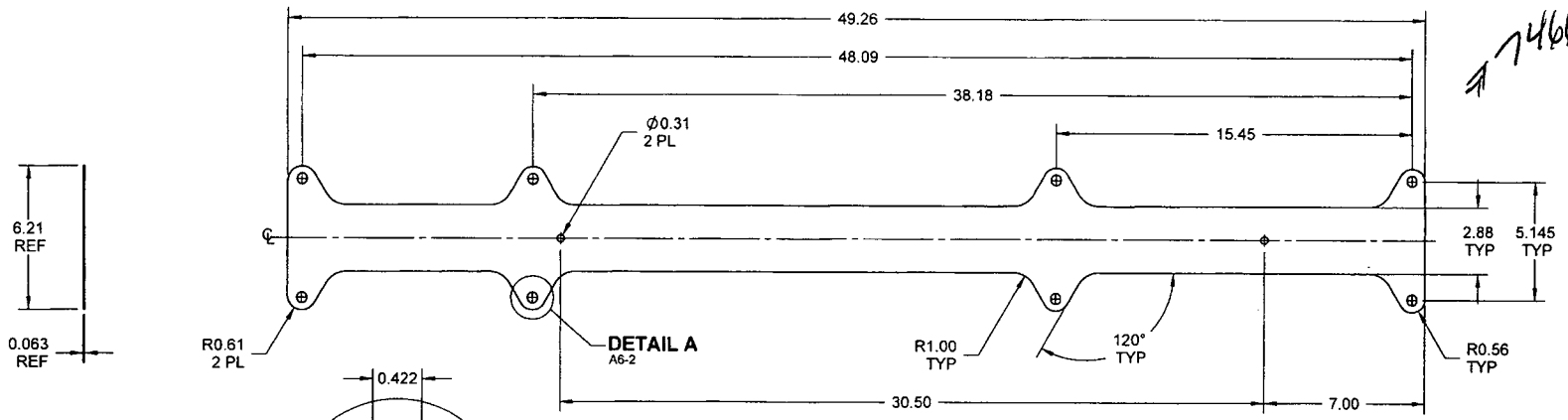

D3807-3 GASKET

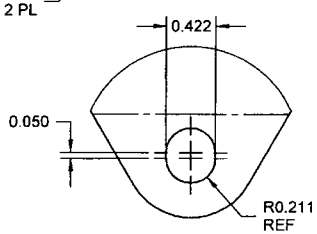

DETAIL A: SLOT DETAIL B5-2 C5-2 B5-3 C5-3
TYP

DESIGN		**DART AEROSPACE USA, INC.** PORT HADLOCK, WA
DRAWN		
CHECKED		DRAWING NO. D3807 — REV. A — SHEET 2 OF 3
MFG. APPR.		
APPROVED		TITLE GASKET — SCALE NTS
DE APPR.		
DATE 08.11.21		

COPYRIGHT © 2008 BY DART AEROSPACE USA, INC.
THIS DOCUMENT IS PRIVATE AND CONFIDENTIAL AND IS SUPPLIED ON THE EXPRESS CONDITION THAT IT IS NOT TO BE USED FOR ANY PURPOSE OR COPIED OR COMMUNICATED TO ANY OTHER PERSON WITHOUT WRITTEN PERMISSION FROM DART AEROSPACE USA, INC.

Dart Aerospace Ltd

W/O:		WORK ORDER CHANGES					
DATE	STEP	PROCEDURE CHANGE	By	Date	Qty	Approval Chief Eng / Prod Mgr	Approval QC Inspector

Part No: _____ **PAR #:** _____ **Fault Category:** _____ **NCR:** Yes No **DQA:** _____ **Date:** _____

Resolution: _____ **Disposition:** _____ **QA: N/C Closed:** _____ **Date:** _____

NCR:		WORK ORDER NON-CONFORMANCE (NCR)						
DATE	STEP	Description of NC Section A	Corrective Action Section B			Verification Section C	Approval Chief Eng	Approval QC Inspector
			Initial Chief Eng	Action Description Chief Eng	Sign & Date			

NOTE: Date & initial all entries

H:\fFORMS\Quality Assurance\approved QA\NCRWO RevE

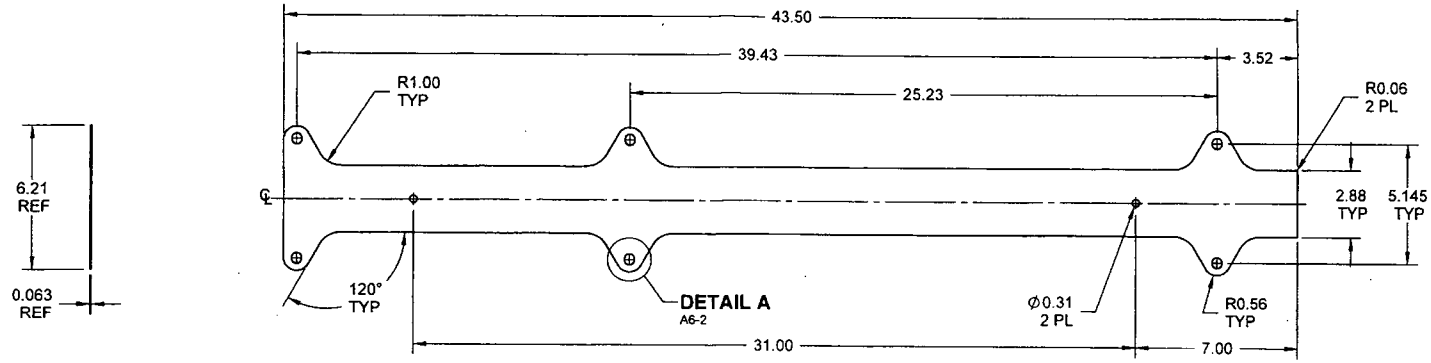

D3807-5 GASKET

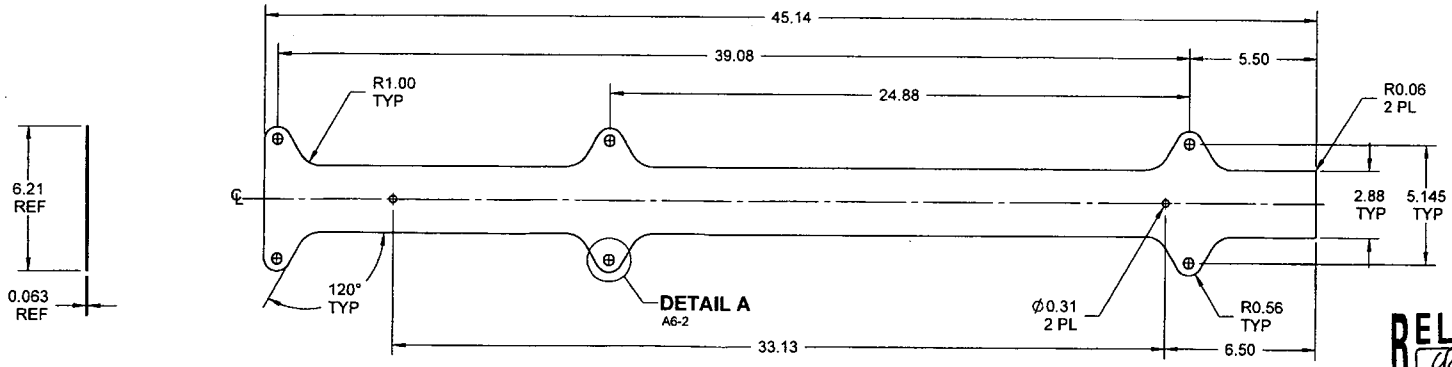

D3807-7 GASKET

#74663

RELEASED
09.03.03

DESIGN		**DART AEROSPACE USA, INC.** PORT HADLOCK, WA
DRAWN		
CHECKED		DRAWING NO. D3807 — REV. A — SHEET 3 OF 3
MFG. APPR.		
APPROVED		TITLE GASKET — SCALE NTS
DE APPR.		
DATE 08.11.21		

COPYRIGHT © 2008 BY DART AEROSPACE USA, INC.
THIS DOCUMENT IS PRIVATE AND CONFIDENTIAL AND IS SUPPLIED ON THE EXPRESS CONDITION THAT IT IS NOT TO BE USED FOR ANY PURPOSE OR COPIED OR COMMUNICATED TO ANY OTHER PERSON WITHOUT WRITTEN PERMISSION FROM DART AEROSPACE USA, INC.

Dart Aerospace Ltd

W/O:		WORK ORDER CHANGES					
DATE	STEP	PROCEDURE CHANGE	By	Date	Qty	Approval Chief Eng / Prod Mgr	Approval QC Inspector

Part No: _____ **PAR #:** _____ **Fault Category:** _____ **NCR:** Yes No **DQA:** _____ **Date:** _____

Resolution: _____ **Disposition:** _____ **QA: N/C Closed:** _____ **Date:** _____

NCR:		WORK ORDER NON-CONFORMANCE (NCR)						
DATE	STEP	Description of NC Section A	Corrective Action Section B			Verification Section C	Approval Chief Eng	Approval QC Inspector
			Initial Chief Eng	Action Description Chief Eng	Sign & Date			

NOTE: Date & initial all entries

H:\fFORMS\Quality Assurance\approved QA\NCRWO RevE